SINCE 1968
AL BASSAM®
مصانع البسام العالمية ذ.م.م
International Factories LLC

Ajman (Head Office) Tel: +971 6 74 68 668	**Abu Dhabi** Tel: +971 2 55 51 667	**Sharjah - Ind. Area** Tel: +971 6 53 45 115	**Sharjah - MBZR** Tel: +971 6 53 52 569
Al Ain Tel: +971 3 72 17 368	**Dubai - Al Rashidiya** Tel: +971 4 28 44 428	**Dubai - Al Aweer** Tel: +971 4 33 32 424	**Dubai - Al Qouz** Tel: +971 4 34 00 042

Umm Al Quwain
Tel: +971 6 76 70 600

Send us an Email | Visit our Website | Follow us on Twitter | Follow us on Snapchat | Follow us on Instagram | Like us on Facebook

ROAD BARRIERS

Emirates Quality Mark NB-0003 | ADCE Abu Dhabi Commercial Engineering Services | DEPARTMENT OF ENERGY | Emirates Authority for Standardization & Metrology | ICV برنامج المحتوى الوطني | TÜV NORD ISO 9001 ISO 9001-2015 CERTIFIED COMPANY | WRAS APPROVED PRODUCT | UNITED ARAB EMIRATES MINISTRY OF ENERGY & INDUSTRY | بلدية دبي Dubai Municipality | RECORD HOLDER GUINNESS WORLD RECORDS

www.albassam.ae

ROAD BARRIERS

ROAD BARRIER 1
WE ARE THE FIRST

Road barriers are used to protect traffic from roadside obstacles or hazards, such as steep slopes enough to cause rollover crashes, fixed objects like bridge piers, and bodies of water, construction sites and diversions.

Road barriers can also be used with medians, to prevent vehicles from colliding with hazards within the median and head on collusions.

Al Bassam HD Road Barriers are scientifically designed with latest technology and are manufactured using tough molded High Density Polyethylene. With the biggest and latest machinery, we are the first company to introduce HDPE Road Barriers throughout UAE. With past experiences and taking into UAE weather conditions, these HD Road Barriers are designed with high stability to withstand harsh weather and climatic conditions of UAE with longer life span than low density. It is easy to carry, transport, stack, store compared to traditional concrete barrier.
One person can easily move an empty barrier into position. The simple molded male-female pin system allows road barriers to be tightly interlocked for extra strength and can rotate 180 degree.

APPLICATIONS

- CAR PARKING
- ROADS CLOSURE
- ROADS DIVERSION
- PEDESTRIAN CONTROL
- CONSTRUCTION/BUILDING SITES
- CONCERTS, GALAS AND SPORTS EVENTS

ROAD BARRIER DIMENSIONS

النوع Types	الارتفاع Height / cm	الطول Length / cm	العرض Width / cm	عرض القاع Bottom Width / cm
Type 1	82	229	17.5	40
Type 2	104	229	17.5	40

"To make it easy to reach for our clients,
Al Bassam has a huge fleet of 45 vehicles ready to serve you at your doorsteps.

PLASTIC ROAD BARRIERS
TECHNICAL SPECIFICATIONS

Type 1

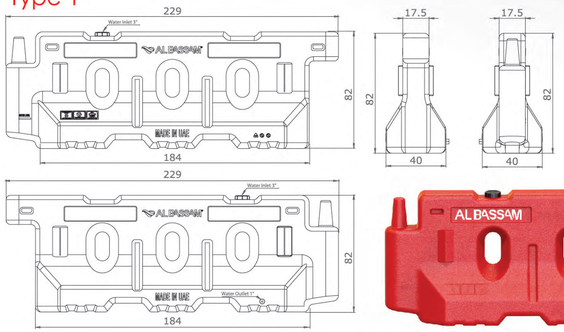

Type 2

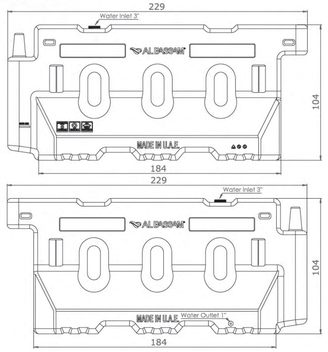

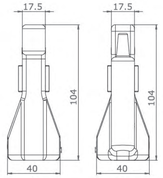

male-female pin system

SINCE 1968
AL BASSAM®
مصانع البسام العالمية ذ.م.م
International Factories LLC

Ajman (Head Office) Tel: +971 6 74 68 668	**Abu Dhabi** Tel: +971 2 55 51 667	**Sharjah - Ind. Area** Tel: +971 6 53 45 115	**Sharjah - MBZR** Tel: +971 6 53 52 569
Al Ain Tel: +971 3 72 17 368	**Dubai - Al Rashidiya** Tel: +971 4 28 44 428	**Dubai - Al Aweer** Tel: +971 4 33 32 424	**Dubai - Al Qouz** Tel: +971 4 34 00 042

Umm Al Quwain
Tel: +971 6 76 70 600

Send us an Email | Visit our Website | Follow us on Twitter | Follow us on Snapchat | Follow us on Instagram | Like us on Facebook

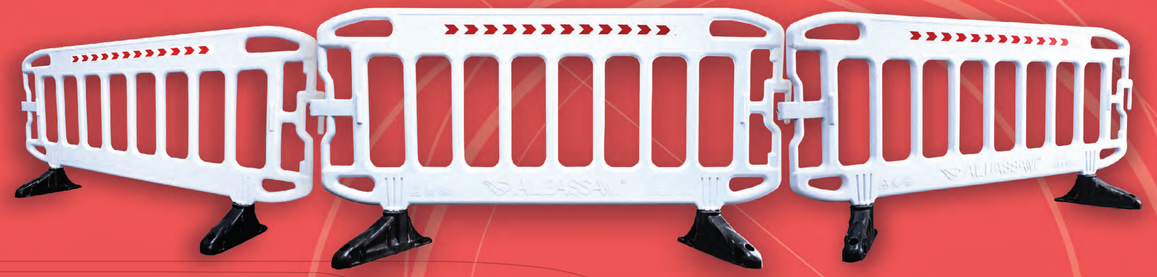

AL BASSAM SMART EVENTS BARRIERS

علامة الجودة الإماراتية Emirates Quality Mark NB-0003 | ADCE أبوظبي للخدمات الهندسية Abu Dhabi Commercial Engineering Services | دائرة الطاقة DEPARTMENT OF ENERGY | هيئة الإمارات للتوحيد والمعايرة Emirates Authority For Standardization & Metrology | ICV برنامج المحتوى الوطني | TÜV NORD ISO 9001 ISO 9001-2015 CERTIFIED COMPANY | WRAS APPROVED PRODUCT | UNITED ARAB EMIRATES MINISTRY OF ENERGY & INDUSTRY | بلدية دبي Dubai Municipality | RECORD HOLDER GUINNESS WORLD RECORDS

www.albassam.ae

AL BASSAM SMART EVENTS BARRIERS

AL BASSAM SMART EVENTS BARRIERS

HIGH DENSITY POLYETHYLENE

The Al Bassam Smart Events Barriers are durable and robust design and can be used both indoor and outdoor activities. They are a cost-effective barrier system that is fast and easy to install with no need for lifting machinery, used to create safe and clear walkways for pedestrians. Al Bassam Smart Events Barriers are supplied with white barriers.

Lightweight, versatile, and often used for temporary applications or events. Provide a secure barrier that directs foot traffic and prevents entry into hazardous areas.

Benefits, Usages and Features:

- Indoor or outdoor event management
- Temporary walkways for pedestrians
- Indoor maintenance works
- Construction Sites
- Road Work Zones

Easy to connect

Multiple Configurations

Anti-slip

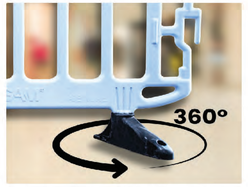

360° Swivel Feet

TECHNICAL SPECIFICATION

Al Bassam Smart Events Barriers are standing at 1030mm high and 2000mm wide. Each of the barriers constructed from high quality and produced using blow-molded HDPE (High Density Polyethylene) which is essentials in providing a safe barrier system for street works and other hazards.

Stacking Features – Smart Events Barriers are able to lock together to ensure safe storage and transportation.

Easy to connect – Easy to link, making it possible to connect barriers together incorporating the 'peg and hole system.

Multiple Configurations – Designed for contractors to use in numerous configuration offering adaptable solutions to secure additional barriers. This free-standing barrier with 360° swivel feet can also be positioned at the 90° angle to ensure stability.

SureFoot block – this barriers come with an anti-trip SureFoot block. The PVC adds extra weight and stability to the system, and feet can swivel 360° and be positioned at 90° for additional support.

DIMENSIONS

Height / mm	Length / mm	Width / mm	Bottom Width(Legs) / mm
1030	2000	50	500

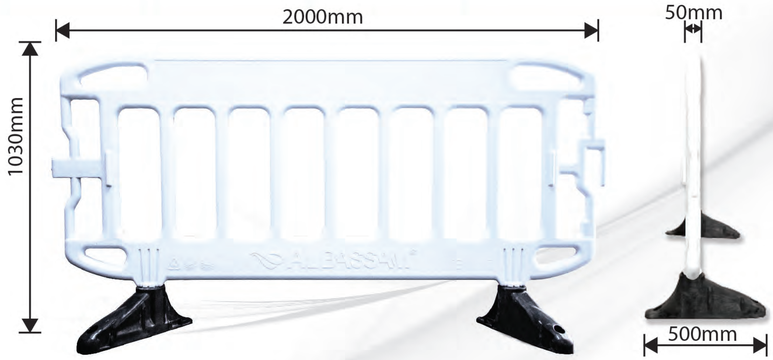

SINCE 1968
AL BASSAM®
مصانع البسام العالمية ذ.م.م
International Factories LLC

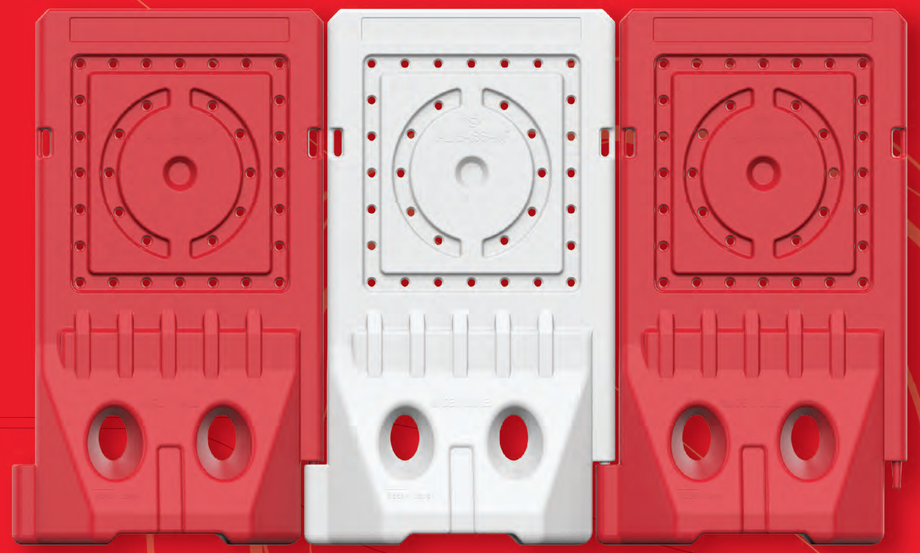

FENCE

Ajman (Head Office)	Abu Dhabi	Sharjah - Ind. Area	Sharjah - MBZR
Tel: +971 6 74 68 668	Tel: +971 2 55 51 667	Tel: +971 6 53 45 115	Tel: +971 6 53 52 569
Al Ain	**Dubai - Al Rashidiya**	**Dubai - Al Aweer**	**Dubai - Al Qouz**
Tel: +971 3 72 17 368	Tel: +971 4 28 44 428	Tel: +971 4 33 32 424	Tel: +971 4 34 00 042

Umm Al Quwain
Tel: +971 6 76 70 600

Send us an Email | Visit our Website | Follow us on Twitter | Follow us on Snapchat | Follow us on Instagram | Like us on Facebook

علامة الجودة الإماراتية Emirates Quality Mark NB-0003 | ADCE أبوظبي التجاري للخدمات الهندسية Abu Dhabi Commercial Engineering Services | دائرة الطاقة DEPARTMENT OF ENERGY | هيئة الإمارات للمواصفات والمقاييس Emirates Authority For Standardization & Metrology | ICV برنامج المحتوى الوطني | TÜV NORD ISO 9001 ISO 9001-2015 CERTIFIED COMPANY | WRAS APPROVED PRODUCT | UNITED ARAB EMIRATES MINISTRY OF ENERGY & INDUSTRY | بلدية دبي Dubai Municipality | RECORD HOLDER GUINNESS WORLD RECORDS

www.albassam.ae

FENCE

POLYETHYLENE
FENCE

Al Bassam HD Fences are manufactured in the biggest and latest technology machine in the world, which is scientifically designed by German technology using tough molded High Density Polyethylene. With our experience of local weather conditions, these HD Fences are designed with high stability to withstand harsh climatic conditions of UAE with longer life span than low density product.

Polyethylene fencing has become a substitute for concrete and Aluminum and link and due to its light weight it is easy for handling, transportation, storage and can easily be maneuvered single handedly.

The simple molded male-female pin system allows fences to be tightly interlocked for extra grip and can be rotated to 180 degree.

Polyethylene fence typically is more cost effective and long lasting thus value for money compared to concrete aluminum link.

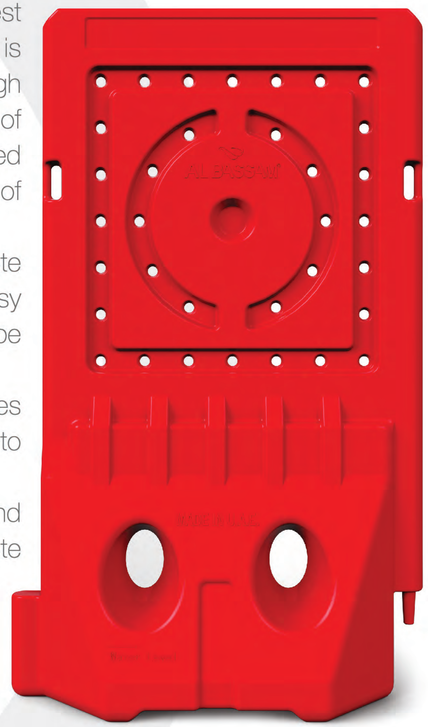

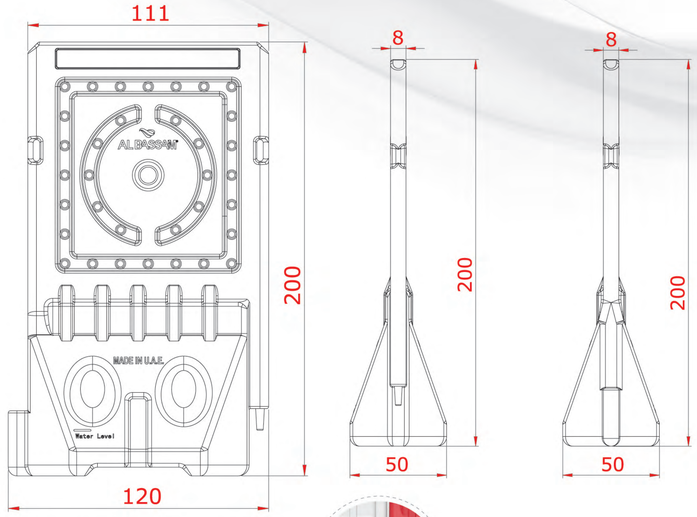

All Dimensions are in cm

male-female pin system

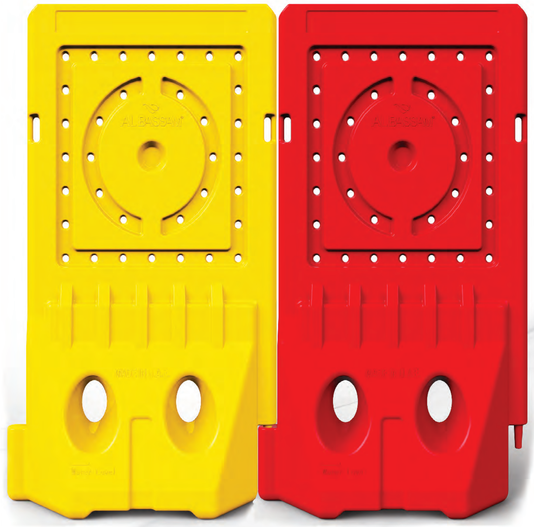

Usages:

- Construction/Building sites
- Concerts, galas and sports events
- Public Safety
- Parks